Absolute encoders - CANopen

Shaft with clamping or synchro flange
Single turn 9...16 bit,
Multi turn 0...16 bit

FNC AC 36S Series

Features

- **Encoder single - or multiturn /CANopen**
- **Magnetic or optical sensing**
- **Single turn resolution up to 21 bit**
- **Multi turn 0 ...32 bit**
- **Clamping flange or synchro flange**
- **Permanent check of code continuity**
- **Extreme resistance to shock and vibration**
- **Encoder with electronic reset**

Technical data - electrical ratings

Voltage supply	8VDC to 30VDC
Protection:	Output short circuit protection. Reverse polarity protection (except 5V version)
Consumption w/o load	≤80 mA (24 VDC)
Interface	CANopen CiA DSP 301 V4.01, DSP 305 V1.0, DSP 406 V3.1
Resolution (steps/turn)	Magnetic: 14 bit Optic: 21 bit
Absolute accuracy	Magnetic: ±0,1° Optic: ±0,01°
Sensing method	Magnetic
Code	Binary
Code sequance	CW default, programmable
Programmable paramaters	Operating modes Total resolution Scaling Rotation speed monitoring Node ID Baud Rate
Note:	All paramaters change via microchip interface
Interference immunity	DIN EN 61000-6-2
Emitted interference	DIN EN 61000-6-4
Approval	CE

Technical data - mechanical design

Dimensions (flange)	ø40 mm
Shaft loading	≤40 N axial ≤80 N radial
Protection DIN EN 60529	IP54, IP65
Operating speed	≤10000 rpm
Starting torque	≤0.001Nm (IP 65)
Materials	Housing, Flange : Aluminium Shaft : Stainless steel
Shaft diameter:	6, 8, 10 mm (other diameters on request)
Bearings lifetime:	$2x10^9$ rev. at 100% of full rated shaft load (minimum)
Operating temperature	-40...+90 °C -40 °F ...+180 °F
Weight approx.	350 g

Terminal assignment

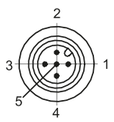

Connector M12

Conn.	Signals	Description
Pin 1	n.c.	–
Pin 2	+Vs	Supply voltage
Pin 3	CAN_GND	CAN Ground
Pin 4	CAN_H	Bus (dominant High)
Pin 5	CAN_L	Bus (dominant Low)

Absolute encoders - CANopen

Shaft with clamping or synchro flange
Single turn 9...16 bit,
Multi turn 0...16 bit

FNC AC 36S Series

Mechanical Dimensions

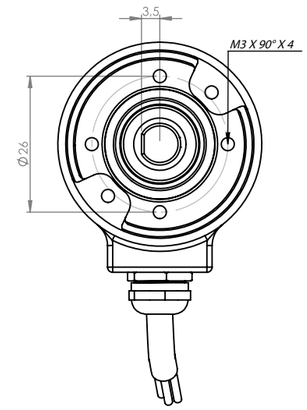

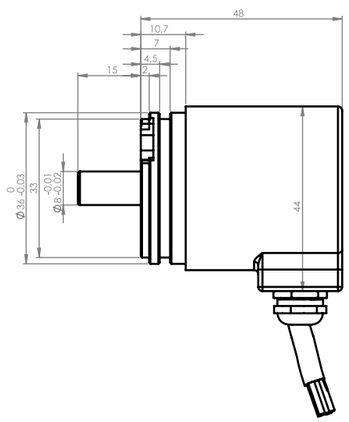

CANopen® features

Bus protocol	CANopen
Device profile	CANopen - CiA DS 406
Preset	Parameter for setting the encoder to a requested position value assigned to a defined shaft position of the system. The offset of encoder zero point and mechanical zero point is stored in the encoder.
Rotating direction	The rotating direction in which there have to be ascending or descending position values can be defined. Default setting: Ascending position values when looking at the flange and rotating the shaft clockwise.
Scaling	Parameter defining the steps per turn as well as the total resolution.
Diagnosis	The encoder supports the following error warnings: - Position error - Lithium battery voltage (multiturn)
Default	125 kbit/s, Node ID 1

Cable

Core colour	Signals	Description
white	0 V	Supply voltage
brown	+Vs	Supply voltage
green	CAN_H	Bus (dominant High
yellow	CAN_L	Bus (dominant Low)

Encoder Part Number

FNC A C O 36 S 10 S12 MB12 30V – R4

Absolute

C: CANopen

O: Optical **M**: Magnetic

Housing: 40: 40 mm

Flange Type:
S : Servo flange **B :** Clamping flange

Shaft diameter : 6, 8, 10
Other dimensions on request

Electrical Connections:
Cable
R4 : radial 4m **R1C4 :** connector after 1m Cable
Connector:
R1212 R2312L R2312R

Supply Voltage:
30V : 8-30V input

MG12 : Gear Multiturn 12 bit
MB12 : Battery Multiturn 12 bit, MB0, MB8, MB16

S : Single Turn
up to 21 bit