Spring Flex Couplings

Coupling View | Drawing | Order Code

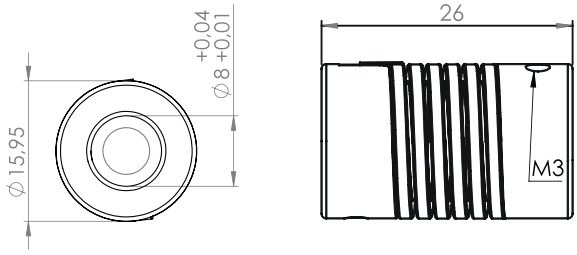

SPF | **L** | **D** | **d1** | **d2**

- **L:** Length 26 mm
- **D:** Outer diameter 16 mm
- **d2:** Inner diameter 6, 8 mm
- **d1:** Inner diameter 6, 8 mm

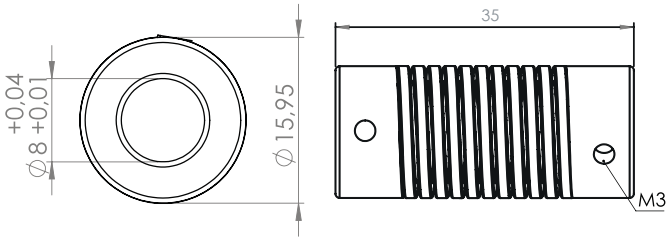

SPF | **L** | **D** | **d1** | **d2**

- **L:** Length 35 mm
- **D:** Outer diameter 16 mm
- **d2:** Inner diameter 6, 8 mm
- **d1:** Inner diameter 6, 8 mm

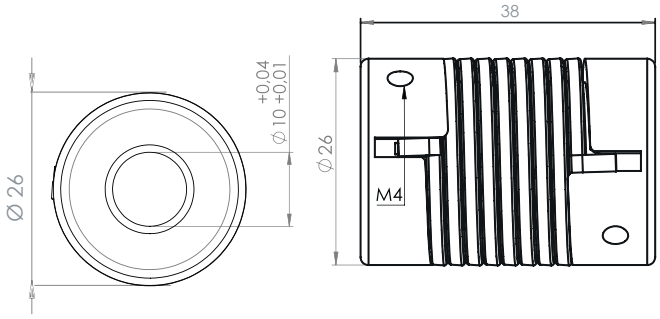

SPF | **L** | **D** | **d1** | **d2**

- **L:** Length 38 mm
- **D:** Outer diameter 26 mm
- **d2:** Inner diameter 8, 10 mm
- **d1:** Inner diameter 8, 10 mm

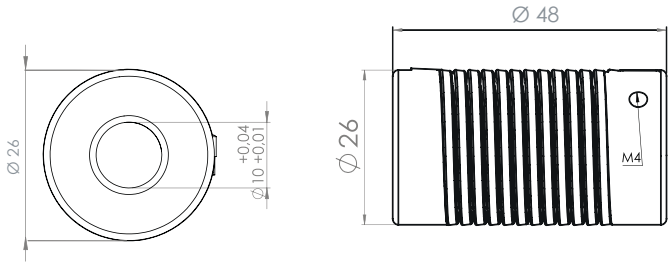

SPF | **L** | **D** | **d1** | **d2**

- **L:** Length 38 mm
- **D:** Outer diameter 26 mm
- **d2:** Inner diameter 10 mm
- **d1:** Inner diameter 10 mm